CAL-135 N GA DRW FOR DRUM TYPE MACHINE

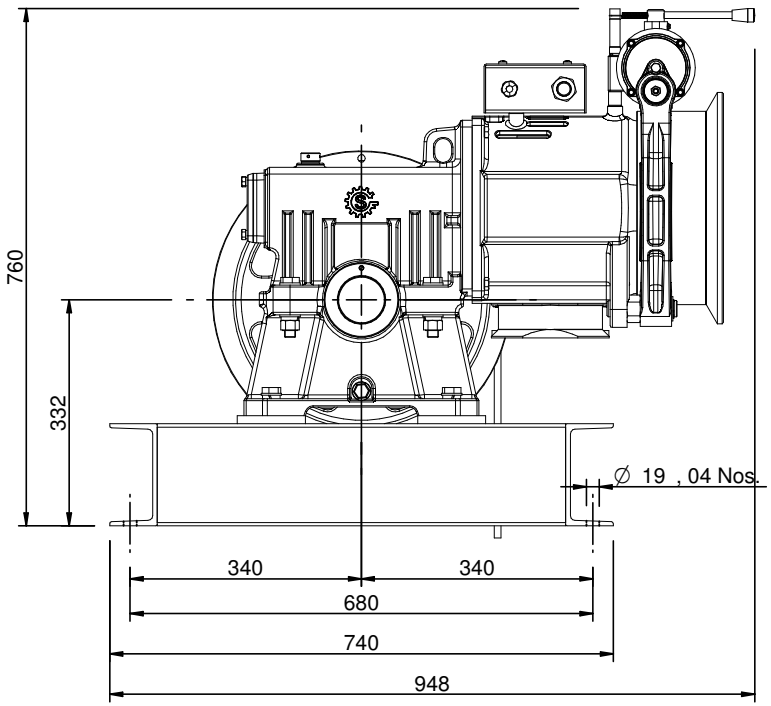

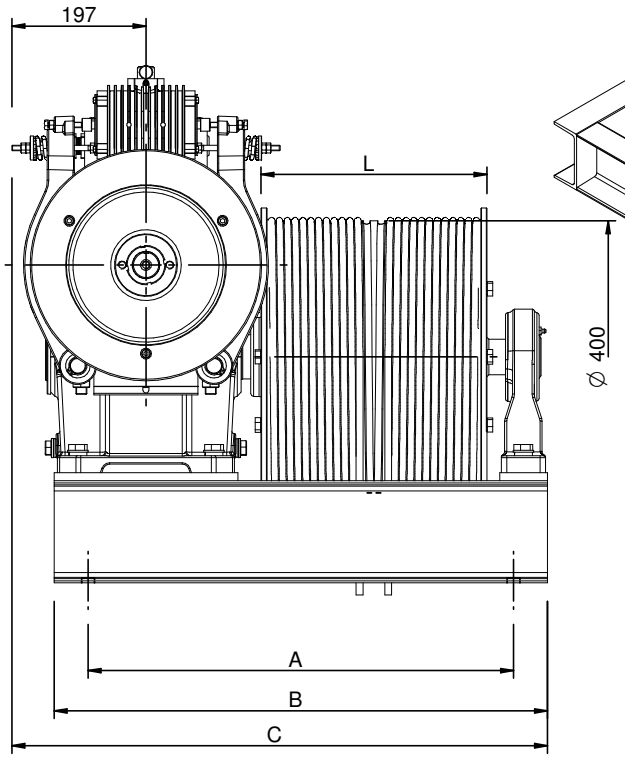

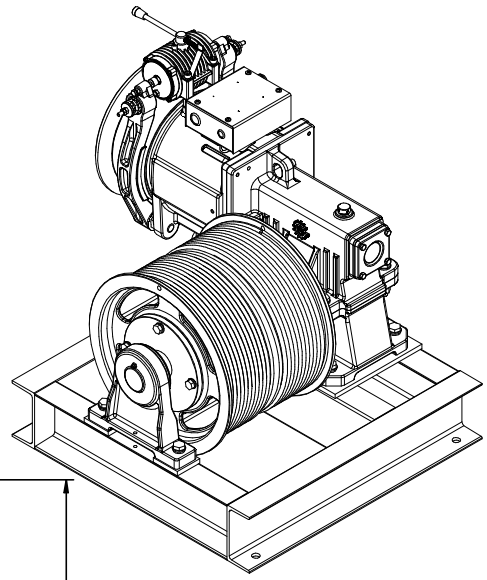

Travelling (mtr)	Drum L (mm)	A (mm)	B (mm)	C (mm)	N x Ø D
12	332	625	725	787	2 x Ø 10
21	498	791	891	953	2 x Ø 10

ALL DIMENSION ARE IN MM UNLESS OTHERWISE SPECIFIED.

THE INFORMATION CONTAINED IN THIS DRAWING IS THE ONLY PROPERTY OF SHARP ENGINEERS ANY REPRODUCTION IN PART OR AS WHOLE WITHOUT THE WRITTEN PERMISSION OF SHARP ENGINEERS IS PROHIBITED.

REVISION No.	DESCRIPTION	DATE	APPROVED BY	DRWN DATE 21/08/2023	SIZE A4	SCALE	TITLE:- CAL-135N G.A. DRAWING DRUM TYPE MACHINE

SHARP ENGINEERS