CAL-165 N GA DRW PULLEY ∅610mm FOR FLAME PROOF MOTOR

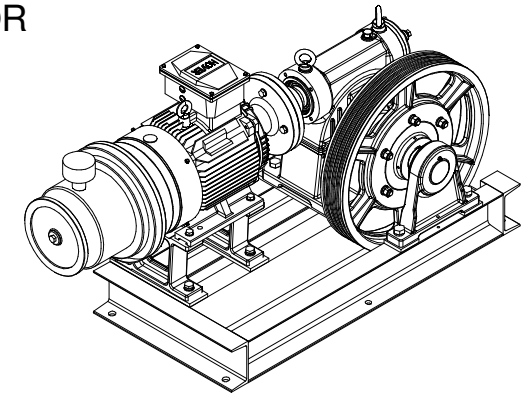

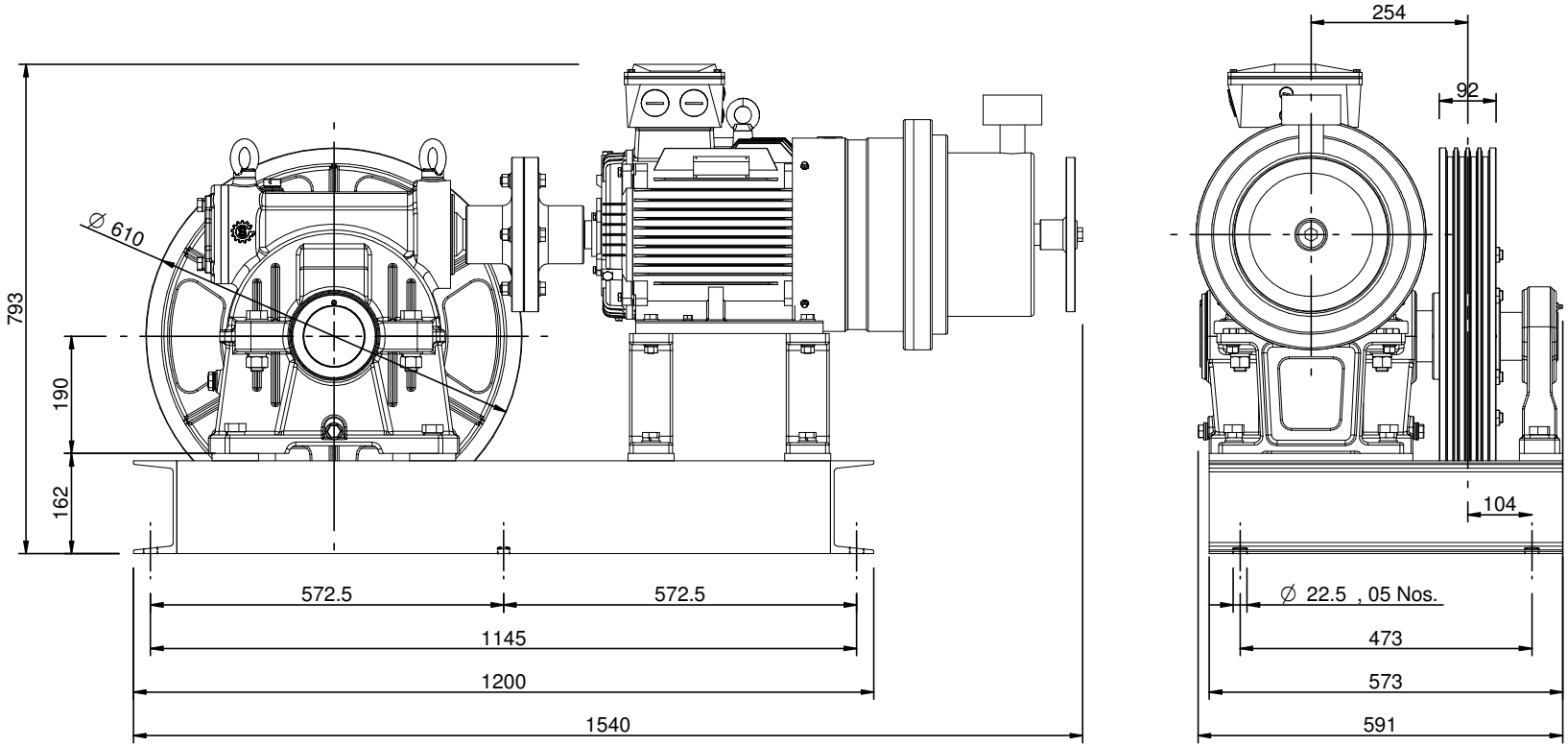

ALL DIMENSION ARE IN MM UNLESS OTHERWISE SPECIFIED.

THE INFORMATION CONTAINED IN THIS DRAWING IS THE ONLY PROPERTY OF SHARP ENGINEERS ANY REPRODUCTION IN PART OR AS WHOLE WITHOUT THE WRITTEN PERMISSION OF SHARP ENGINEERS IS PROHIBITED.

REVISION No.	DESCRIPTION	DATE	APPROVED BY	DRWN BY V P DRWN DATE 14/08/2023	SIZE A4	SCALE 1:12	TITLE:- CAL-165 N G.A. DRAWING R.H.	SHARP ENGINEERS