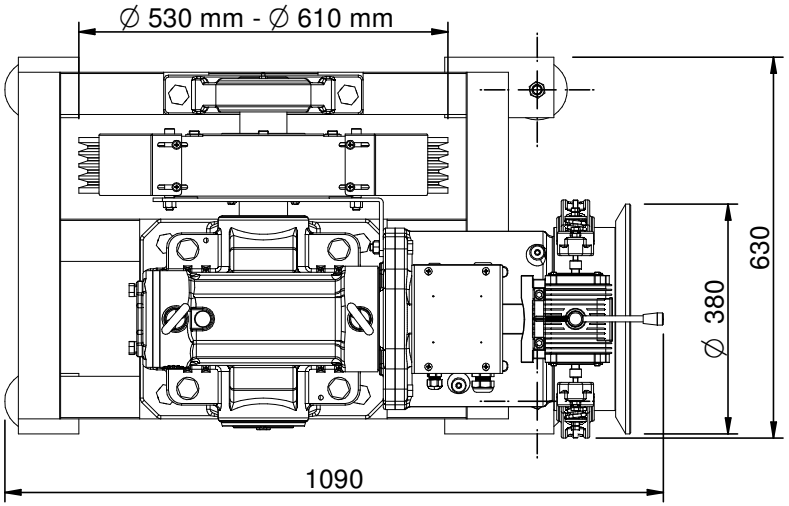

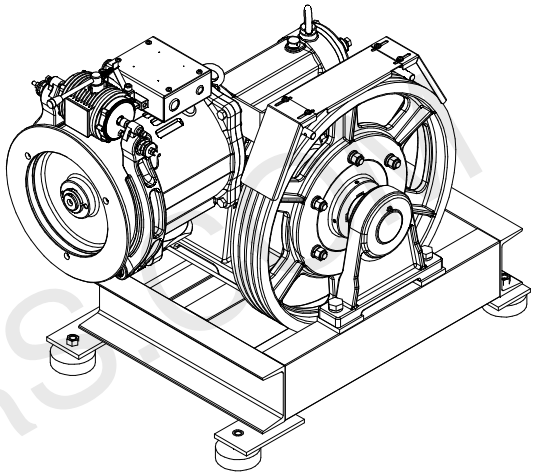

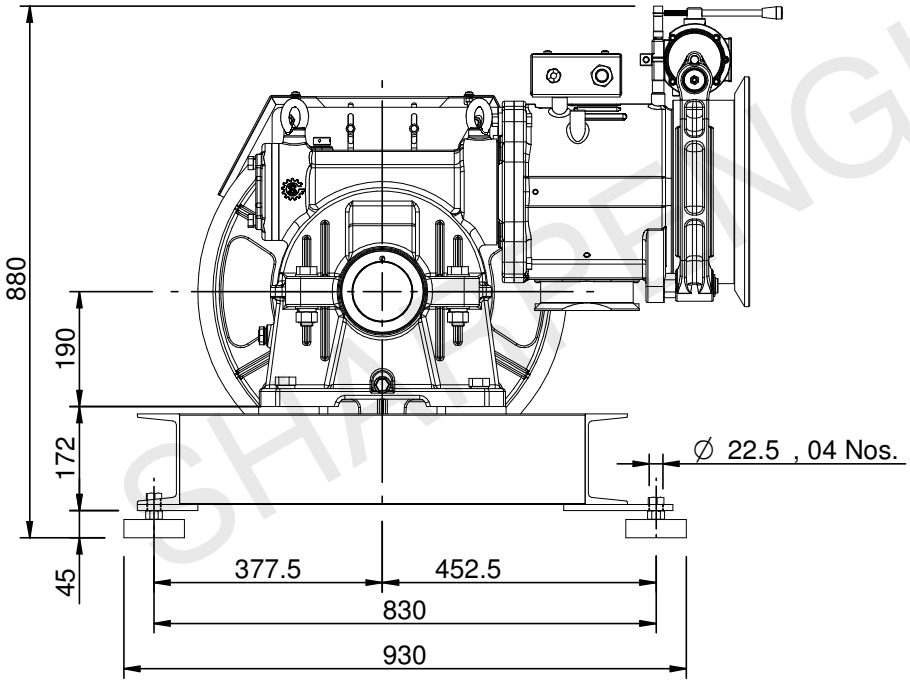

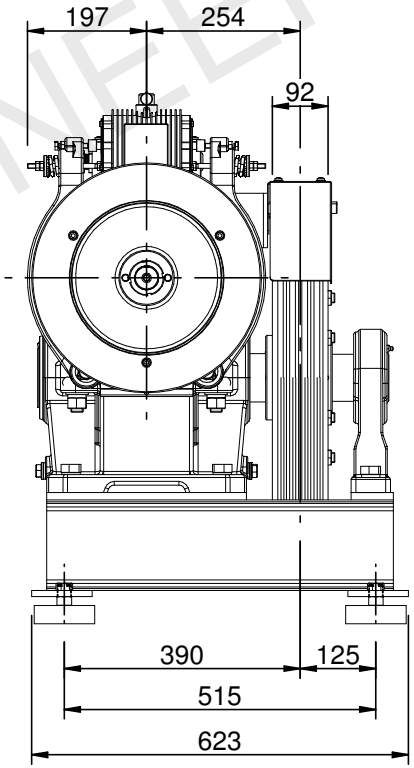

ALL DIMENSION ARE IN MM UNLESS OTHERWISE SPECIFIED.

THE INFORMATION CONTAINED IN THIS DRAWING IS THE ONLY PROPERTY OF SHARP ENGINEERS
ANY REPRODUCTION IN PART OR AS WHOLE WITHOUT THE WRITTEN PERMISSION OF SHARP
ENGINEERS IS PROHIBITED.

SHARP ENGINEERS

REVISION No.	DESCRIPTION	DATE	APPROVED BY	DRWN BY K M DRWN DATE 04-06-2020	SIZE A4	SCALE 1:12.5	TITLE:- CAL-165 N G.A. DRAWING R.H.	SHARP ENGINEERS